VRX

PRODUCT DATA SHEET

VRX2-15-040T

Product Description

The Dutypoint VRX is a premium, ultra high efficiency and space saving booster set for commercial and indsutrial applications.

The VRX features high efficiency IE5 motors and class leading motor mounted variable speed drives with large colour LCD displays and intuitive user HMI.

The system is designed to be straightforward to maintain, both electrically and mechanically, for maintenance or pump replacement while the booster set is operating.

WRAS

- WRAS approved

Control Panel

- Variable speed pumps
- IES2 high system efficiency
- Volt free contacts for common fault and low water level
- IIOT Ready

Protection

- **Anti-Seize technology** which rotates all pumps during low or zero usage and prevents the pumps from seizing up.
- **Burst pipe protection** which constantly monitors the system for signs of major leakage. If detected, an alarm is activated followed by full system deactivation if the required duty is still not met.
- **Cyclic duty** changeover which ensures even wear across all pumps in the system.
- **Low Water Protection** technology which deactivates the pumps if there is no water in the break tank, protecting against dry running.
- **HiRISE** technology which protects the building's pipework by ensuring the pumps start slowly during the initial fill process or following power failure to prevent potentially dangerous surges and consequent damage to the riser. Set Performance



Specification

Suction connection	DN80
Discharge connection	DN80
Maximum working pressure	16.00 bar
speed_text	Variable
IP_Protection	IP55
	4.00 kW
Weight_incl_Fittings	230.00 kg
Vessel_Size	8.0 L
Number of pumps	2

Performance

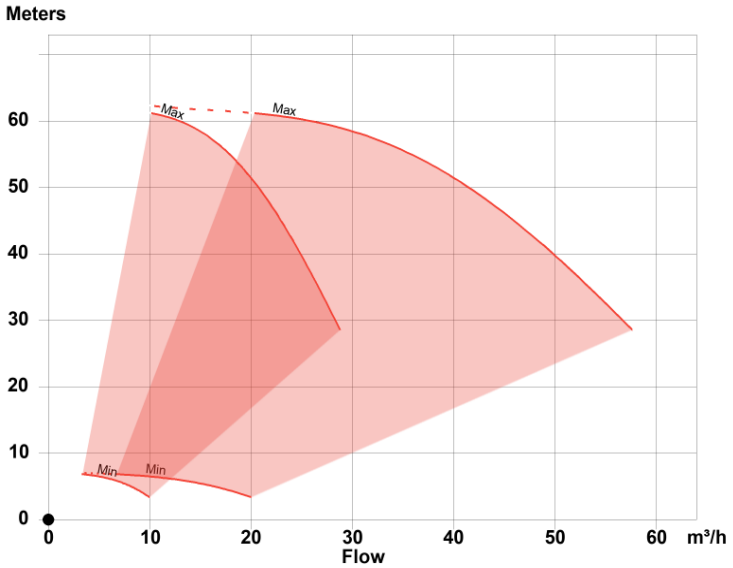

Specifications and illustrations are subject to revision without notice. Dutypoint Ltd is not liable for any incompleteness or inaccuracies.

Electrical Data

Mains connection	3~ 400V/50Hz
Current per pump	7,7 A
Operating speed range	1800-3600 rpm
Frequency range	30-50 Hz

Model Codes

VRX2-15-040T

Range

No of Pumps

Nominal flow in m³/h

Motor kW per Pump

Technical Drawings

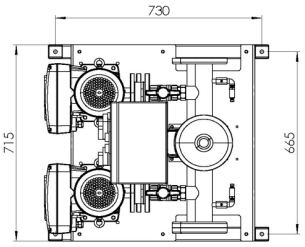

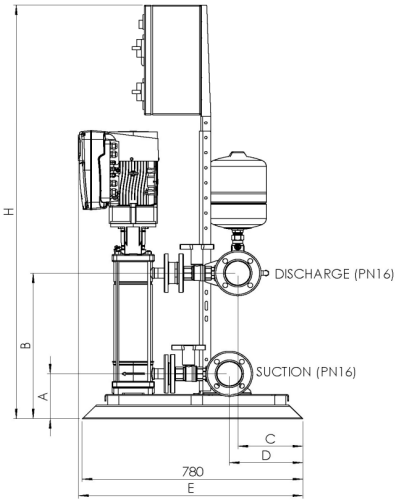

Drawing dimensions

Dimension A	179 mm
Dimension B	438 mm
Dimension C	128 mm
Dimension E	794 mm
Dimension H	1,455 mm

Specifications and illustrations are subject to revision without notice. Dutypoint Ltd is not liable for any incompleteness or inaccuracies.

Performance

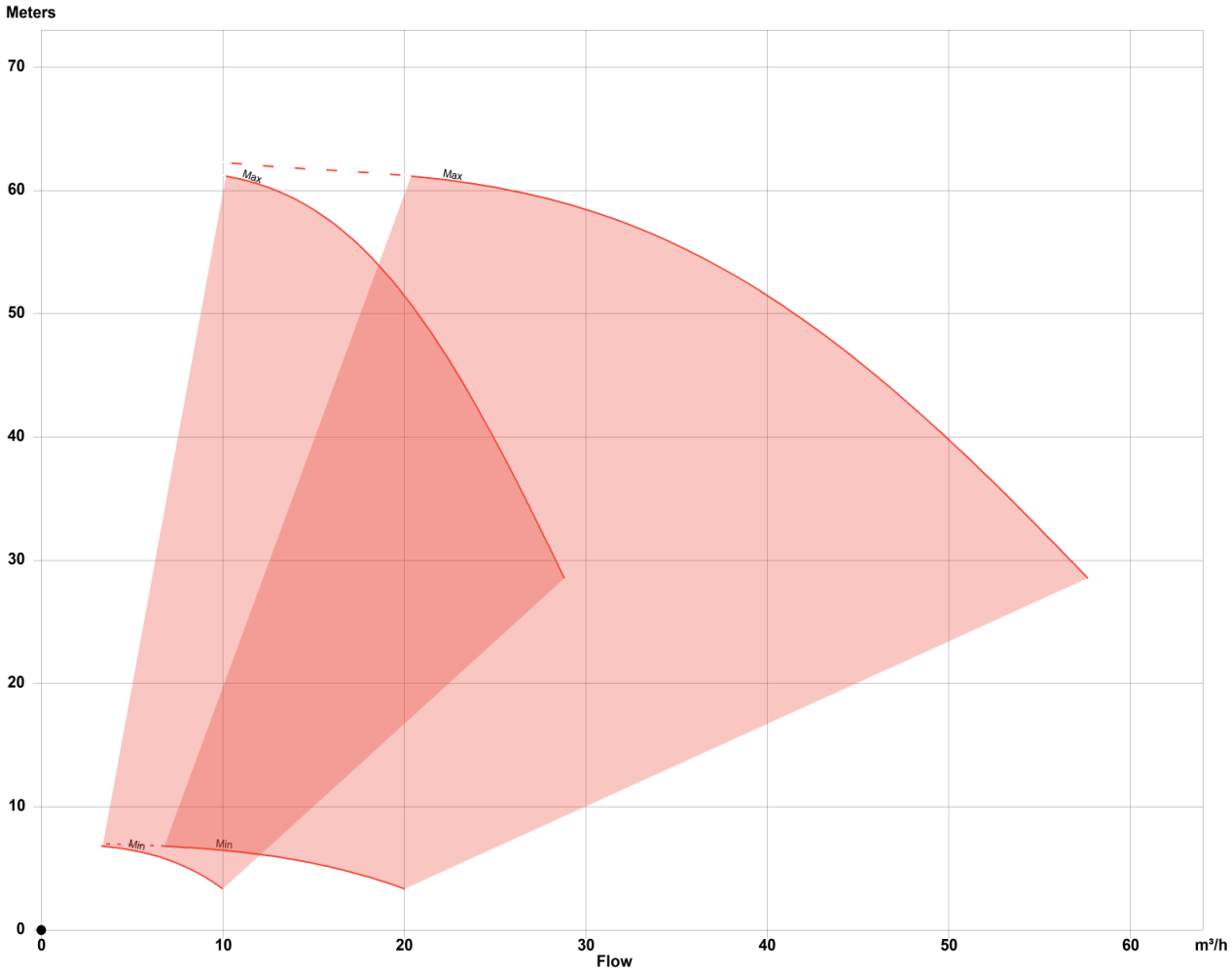

Specifications and illustrations are subject to revision without notice. Dutypoint Ltd is not liable for any incompleteness or inaccuracies.